USDA United States Department of Agriculture
Natural Resources Conservation Service

WISCONSIN STANDARD
DRAWING NO. WI-001C 03/16

CONSTRUCTION PLAN

PRACTICE(S) ROOF GUTTER - 558

LANDOWNER BRAD & TERRI ANDERSON

ADDRESS E7571 COUNTY RD. B, SPRING GREEN, WI 53588

LANDOWNER PHONE NO. 608-445-6057 COUNTY SAUK

TOWNSHIP TROY T 09 N, R 05 E/W, Sec. 18

FIELD OFFICE SAUK CO. LRE DEPT. TELEPHONE NO. 608-355-3245

DIGGERS HOTLINE

Call 3 Work Days
Before You Dig!

Nationwide
811

Toll Free
1-800-242-8511

TDD
1-800-542-2289

Website
www.diggershotline.com

N

Not to Scale

LOCATION MAP

NOTICE TO LANDOWNERS AND EXCAVATORS

Any representation made by the USDA, Natural Resources Conservation Service, or the SAUK County LCD, as to the approximate location or nonexistence of above or under ground hazards does not relieve the owner of the property or the excavator that is hired to complete construction, from notifying Diggers Hotline of the pending construction. You will be liable for damages resulting from construction activities.
Call Diggers Hotline! Ticket Number _____

CONSTRUCTION DRAWINGS AND SPECIFICATIONS ACCEPTANCE

I have reviewed and understand the construction plans and specifications and agree to complete the work accordingly. Failure to meet these plans and specifications may jeopardize any continued NRCS technical assistance or program cost sharing applied for. I understand that it is my responsibility to secure all necessary permits and licenses, and to complete the work in accordance with all local, state, and federal laws. Modification of these construction plans or specifications must be approved by the NRCS before installation. I assume all responsibility for negotiations and contract agreements with the construction contractors.

Landowner Signature: _____ Date: 11-4-19

Designed by: GUS JOHNSON Date: 9/30/2019

Checked by: Kelly Nutt Date: 10/2019

Approved by: Kelly Nutt Date: 10/15/2019

The installed practices comply with applicable NRCS technical standards and specifications. The "redlined" construction plans (as-built drawings) reflect changes made during construction.

Construction Approved by: _____ Date: _____

Job Approval Class III (Total Roof Areas = 1040 sq. ft.) Sheet 1 of 9

SAUK COUNTY
WISCONSIN

COMPUTED QUANTITIES

ITEMS	UNITS	QUANTITIES	SHEET NUMBER	WI CONSTRUCTION SPE. OR JOB SHEET NUMBER
6" K-STYLE, SEAMLESS GUTTER	LIN. FT	60.0	3-9	WCS 023
1" X 8" FACIA BOARD	LIN. FT.	60.0	3-9	WCS 023
DOWNSPOUT (3"X4" OR 4" SCH. 40 PVC) W/FITTINGS AND OUTLETS	LIN. FT.	95.0	3-9	WCS 023

SITE PREP * - INCLUDES

NONE

ANDERSON
OWNER
SAUK COUNTY **LCD,WI**

DESIGNED: _____ **CHECKED:** _____

SHEET 2 **OF** 9

PLAN VIEW

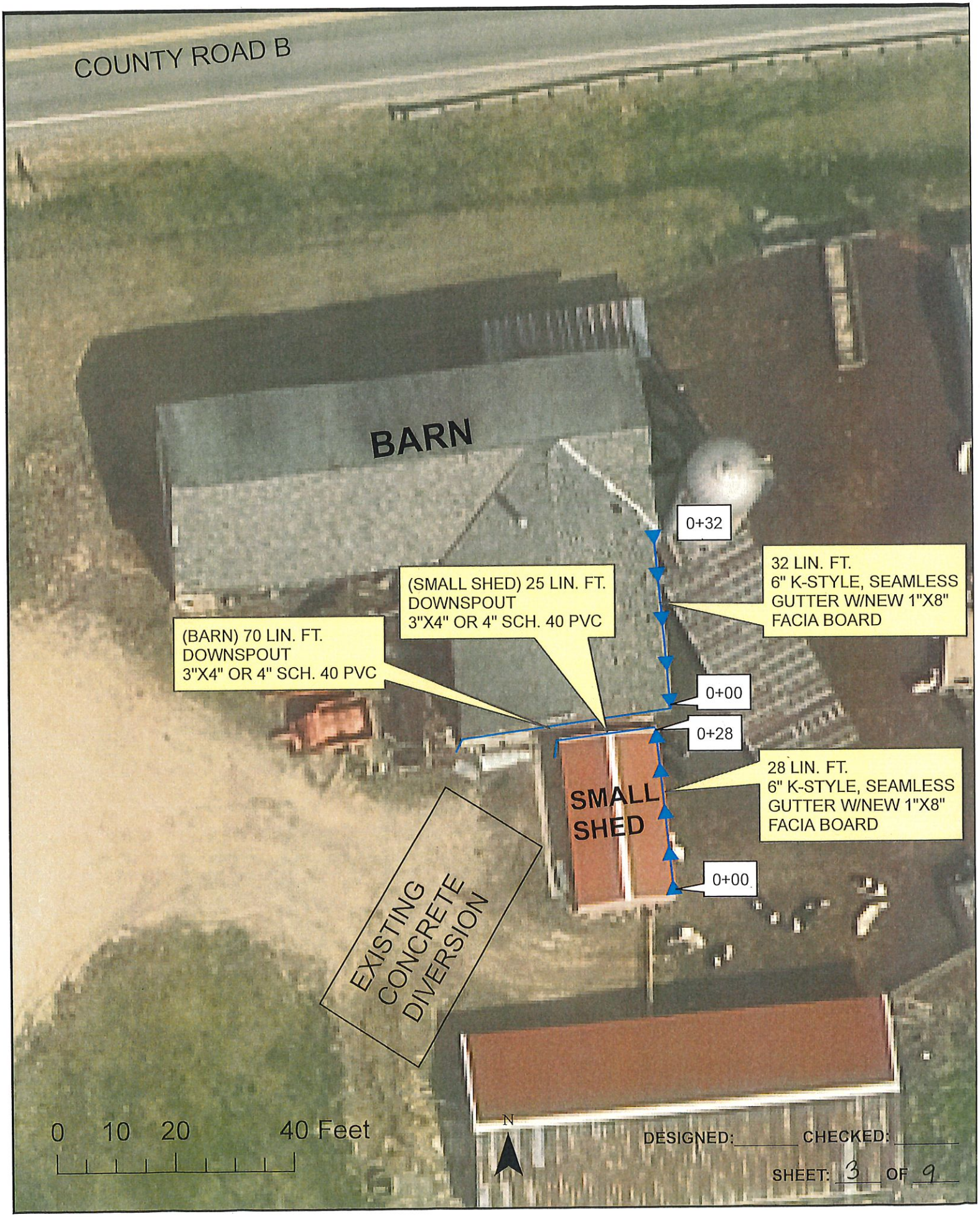

DESIGNED: _____ CHECKED: _____

SHEET: 3 OF 9

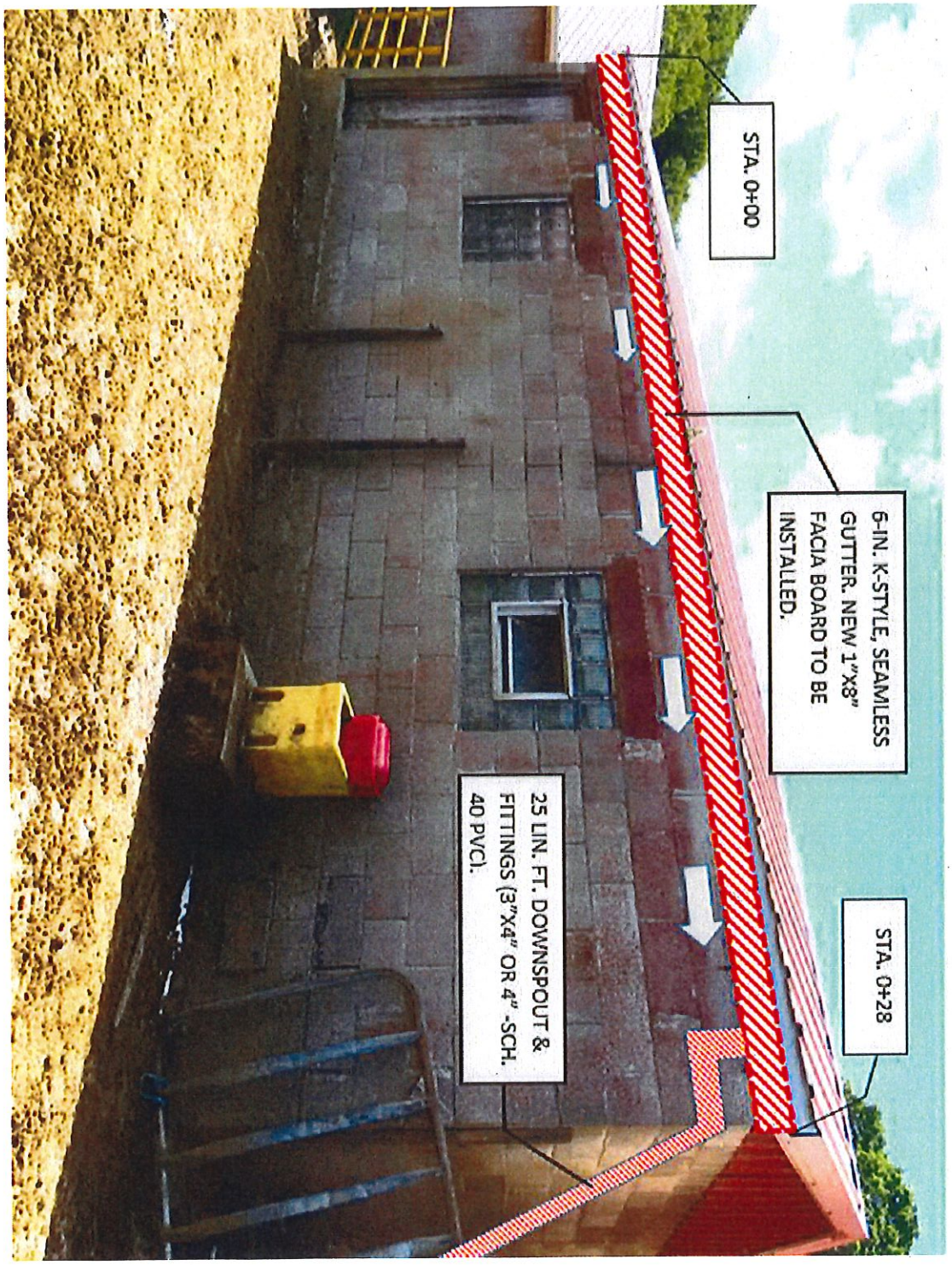

SMALL SHED

NORTH

USDA United States Department of Agriculture Natural Resources Conservation Service	PLAN VIEW CLIENT: ANDERSON COUNTY: SAUK CO. LRE DEPT.	Designed GJ Drawn GJ Checked Approved	Date Drawing Name WI-012 Date 06/14 Sheet 4 of 9

LOCATION: SMALL SHED

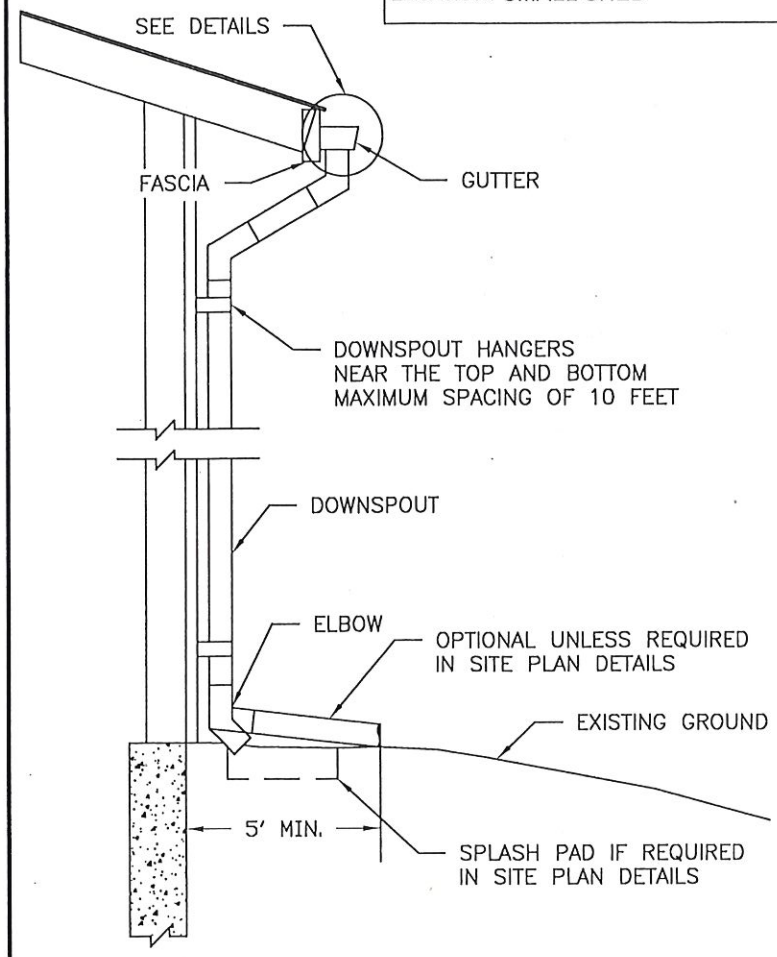

DETAIL A

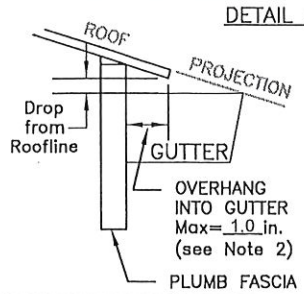

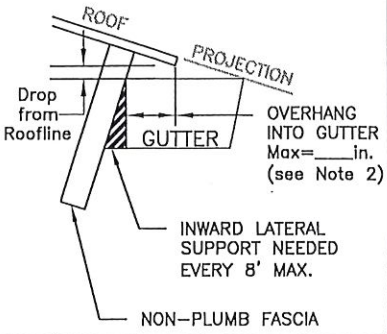

GUTTERS NOT MOUNTED ON FASCIA BOARD SHALL HAVE INWARD AND OUTWARD LATERAL SUPPORT.

ITEM	QUANTITY
GUTTER 6 INCH K-STYLE OR ____" x ____" RECTANGULAR	28 LIN. FT.
GUTTER VERTICAL SUPPORT (select one): ☐ HEAVY DUTY HANGERS SCREWED TO FASCIA OR ☑ HEAVY DUTY HANGERS SCREWED TO FASCIA WITH ROOF STRAPS OR ☐ HEAVY DUTY HANGERS WITH ROOF STRAPS	18 NO.
DOWNSPOUT 3 "x 4 " OR 4.0 INCH DIAMETER ASTM D1785 SCH 40 PVC	25 LIN. FT.
1 " x 8 " FASCIA BOARD AND ALL MATERIALS TO INSTALL	28 LIN. FT.
LATERAL SUPPORT-MAX SPACING 8' (check all that apply): ☐ WEDGES ☑ WRAP AROUND STRAPS ☐ RIGID SUPPORTS ☐ NONE	5 NO.
SNOW & ICE SUPPORT-MAX SPACING 8' (check all that apply): ☐ WRAP AROUND STRAPS ☐ RIGID SUPPORTS ☑ NONE	-- NO.
SNOW GUARDS NEEDED? (installed per manufacturer's recommendations)	NO YES/NO

1. POSITION THE GUTTER SO THE OUTER EDGE OF THE GUTTER IS BELOW THE ROOF LINE PROJECTION, IF POSSIBLE.
2. PLACE SPACERS BEHIND GUTTER EVERY 8' OR CUT ROOF BACK, IF NEEDED, TO ACHIEVE MAX ROOF OVERHANG INDICATED ON THE DRAWING. SPACERS MUST NOT BE CORROSIVE TO GUTTER MATERIAL.
3. REFERENCE WI CONSTR. SPEC. #23-"ALUMINUM AND STEEL ROOF GUTTERS" FOR GUTTERS & DOWNSPOUTS.
4. REFERENCE WI CONSTR. SPECS. #15-"PLASTIC PIPE CONDUITS" FOR PVC DOWNSPOUTS

USDA United States Department of Agriculture Natural Resources Conservation Service	ROOF GUTTERS AND DOWNSPOUTS WITH SURFACE OUTLETS CLIENT: ANDERSON COUNTY: SAUK CO. LRE DEPT.	Date Designed GJ Drawn GJ Checked Approved	File Name WI-408B Date 06/2016 Sheet 5 of 9

ROOF GUTTER CONSTRUCTION

CONSTRUCTION								CONSTRUCTION CHECK		
STATION	Total Drop From Roof Line * (in.)	Distance From Level Line * (in.)	Size of Each Downspout & Gutter Opening (sq. inches)	Number of Downspouts & Gutter Openings Needed	Min. Downspout Slope (%)	Multiple GUTTER Outlets to Single DS or Pipe		*Interval* Gutter Drop needed to fit w/roof (ft.)	Total Gutter Drop needed to fit w/roof (ft.)	Min. Gutter *Interval* Drop Needed to carry design storm (ft.)
						Type of DS or Pipe	Minimum H (in.)**			
0+00	2-3/8	0						0.00	0.00	0.00
0+06	1-3/4	0						0.00	0.00	0.00
0+12	1-3/4	-1/4						0.02	0.02	0.00
0+18	1-3/4	-3/8						0.01	0.03	0.00
0+25	1-3/4	-1-3/8						0.08	0.11	0.00
0+28	1-3/4	-1-1/2	12	1	0.1%			0.02	0.13	0.00

*All values are rounded to the nearest 1/8"

**H is measured from the top of gutter to the entrance into a single pipe/downspout

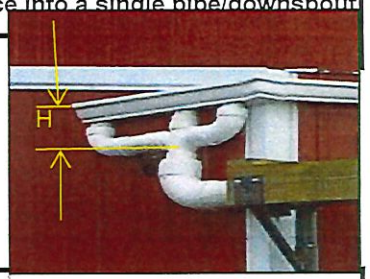

UNDERGROUND OUTLET QUANTITIES (if any)

Item	Size	Slope	Qty	Beg. STA	End STA

SPECIFICATIONS

Wisconsin Construction Specifications:

#23 - Aluminum and Steel Roof Gutters
#15 - Plastic Pipe Conduits
#44 - Corrugated Polyethylene Tubing
#6 - Corrugated Metal Pipe Conduits

NRCS

United States Department of Agriculture - Natural Resources Conservation Service

ROOF GUTTER CONSTRUCTION

BUILDING: Small Shed
LOCATION:

OWNER: **Anderson**
COUNTY: SAUK
Date: 9/30/19
Design By: GJ
Checked:
Sheet 6 of 9

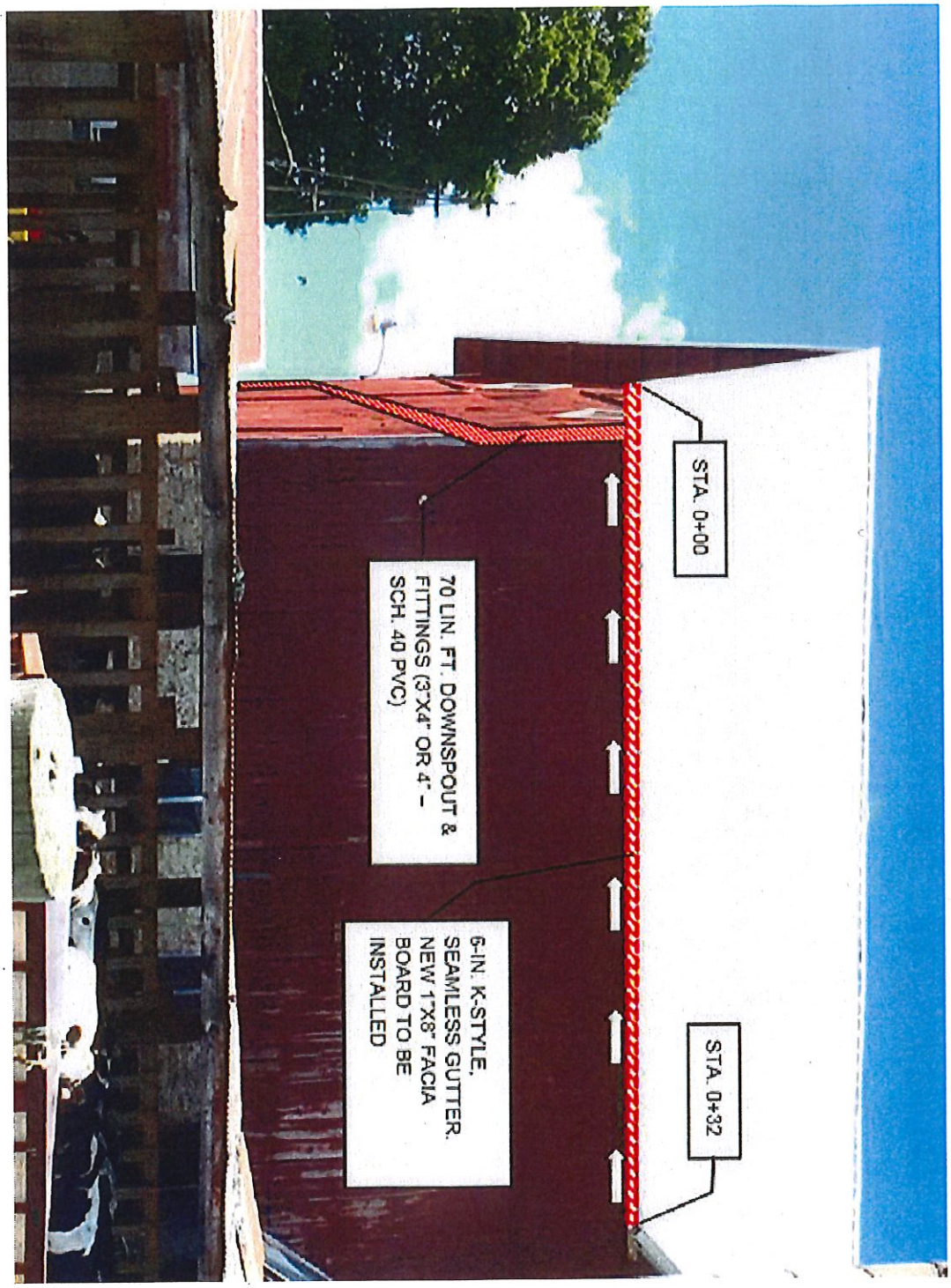

BARN

NORTH

USDA United States Department of Agriculture Natural Resources Conservation Service	PLAN VIEW CLIENT: ANDERSON COUNTY: SAUK CO. LRE DEPT.	Date Designed GJ Drawn GJ Checked Approved	Drawing Name WI-012 Date 06/14 Sheet 7 of 9

LOCATION: BARN

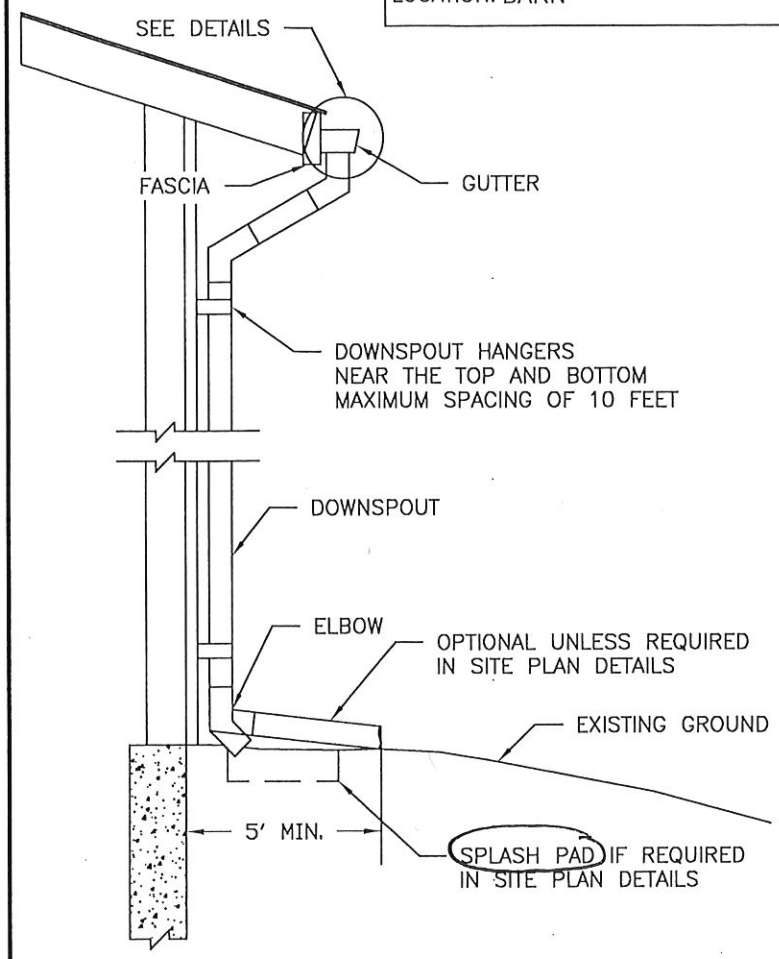

DETAIL A

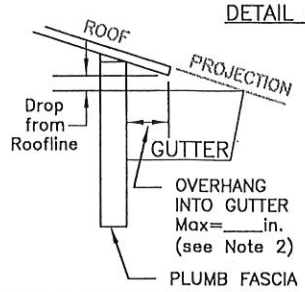

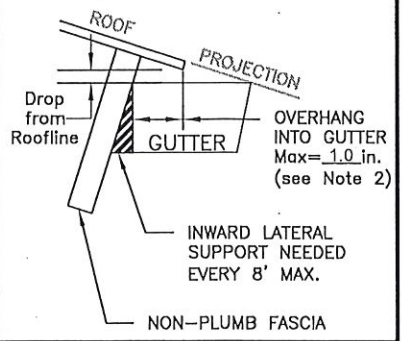

GUTTERS NOT MOUNTED ON FASCIA BOARD SHALL HAVE INWARD AND OUTWARD LATERAL SUPPORT.

ITEM	QUANTITY
GUTTER 6 INCH K-STYLE OR ____" x ____" RECTANGULAR	32 LIN. FT.
GUTTER VERTICAL SUPPORT (select one): ☐ HEAVY DUTY HANGERS SCREWED TO FASCIA OR ☑ HEAVY DUTY HANGERS SCREWED TO FASCIA WITH ROOF STRAPS OR ☐ HEAVY DUTY HANGERS WITH ROOF STRAPS	22 NO.
DOWNSPOUT 3 "x 4 " OR 4.0 INCH DIAMETER ASTM D1785 SCH 40 PVC	70 LIN. FT.
1 " x 8 " FASCIA BOARD AND ALL MATERIALS TO INSTALL	32 LIN. FT.
LATERAL SUPPORT–MAX SPACING 8' (check all that apply): ☐ WEDGES ☑ WRAP AROUND STRAPS ☐ RIGID SUPPORTS ☐ NONE	5 NO.
SNOW & ICE SUPPORT–MAX SPACING 8' (check all that apply): ☐ WRAP AROUND STRAPS ☐ RIGID SUPPORTS ☑ NONE	-- NO.
SNOW GUARDS NEEDED? (installed per manufacturer's recommendations)	NO YES/NO

1. POSITION THE GUTTER SO THE OUTER EDGE OF THE GUTTER IS BELOW THE ROOF LINE PROJECTION, IF POSSIBLE.
2. PLACE SPACERS BEHIND GUTTER EVERY 8' OR CUT ROOF BACK, IF NEEDED, TO ACHIEVE MAX ROOF OVERHANG INDICATED ON THE DRAWING. SPACERS MUST NOT BE CORROSIVE TO GUTTER MATERIAL.
3. REFERENCE WI CONSTR. SPEC. #23–"ALUMINUM AND STEEL ROOF GUTTERS" FOR GUTTERS & DOWNSPOUTS.
4. REFERENCE WI CONSTR. SPECS. #15–"PLASTIC PIPE CONDUITS" FOR PVC DOWNSPOUTS

USDA United States Department of Agriculture Natural Resources Conservation Service	ROOF GUTTERS AND DOWNSPOUTS WITH SURFACE OUTLETS CLIENT: ANDERSON COUNTY: SAUK CO. LRE DEPT.	Date Designed GJ Drawn GJ Checked Approved	File Name WI-408B Date 06/2016 Sheet 8 of 9

ROOF GUTTER CONSTRUCTION

CONSTRUCTION								CONSTRUCTION CHECK		
STATION	Total Drop From Roof Line * (in.)	Distance From Level Line * (in.)	Size of Each Downspout & Gutter Opening (sq. inches)	Number of Downspouts & Gutter Openings Needed	Min. Downspout Slope (%)	Multiple GUTTER Outlets to Single DS or Pipe		*Interval* Gutter Drop needed to fit w/roof (ft.)	Total Gutter Drop needed to fit w/roof (ft.)	Min. Gutter *Interval* Drop Needed to carry design storm (ft.)
						Type of DS or Pipe	Minimum H (in.)**			
0+00	2-1/4	0	12	1	0.9%			0.00	0.00	0.00
0+08	2	+1/8						-0.01	-0.01	-0.01
0+16	2	+1-3/8						-0.11	-0.12	-0.01
0+24	2	+1-3/4						-0.03	-0.15	0.00
0+32	2	+3						-0.10	-0.25	0.00

*All values are rounded to the nearest 1/8"

**H is measured from the top of gutter to the entrance into a single pipe/downspout

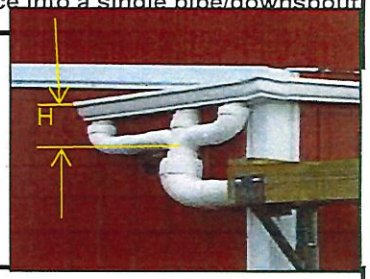

UNDERGROUND OUTLET QUANTITIES (if any)

Item	Size	Slope	Qty	Beg. STA	End STA

SPECIFICATIONS

Wisconsin Construction Specifications:

#23 - Aluminum and Steel Roof Gutters
#15 - Plastic Pipe Conduits
#44 - Corrugated Polyethylene Tubing
#6 - Corrugated Metal Pipe Conduits

NRCS

United States Department of Agriculture - Natural Resources Conservation Service

ROOF GUTTER CONSTRUCTION

BUILDING: BARN
LOCATION:

OWNER: **Anderson**
COUNTY: SAUK Date: 9/30/19
Design By: GJ Checked:
Sheet 9 of 9

SAUK COUNTY WISCONSIN **BID SHEET**

ITEMS	UNITS	QUANTITY	COST PER UNIT	TOTAL COST
6" K-STYLE, SEAMLESS	LIN. FT	60.0		
GUTTER				
1" X 8" FACIA BOARD	LIN. FT.	60.0		
DOWNSPOUT (3"X4" OR	LIN. FT.	98.0		
4" SCH. 40 PVC)				
W/FITTINGS AND OUTLET!				
			TOTAL	

ROOF GUTTERS
PRACTICE NAME

GENERAL CONTRACTOR

B. ANDERSON
LANDOWNER NAME

BID PRICE

SHEET ___ OF ___